REVISIONS			
REV	DESCRIPTION	DATE	APPROVED
A	DRAWN & RELEASED	2/98	2/98

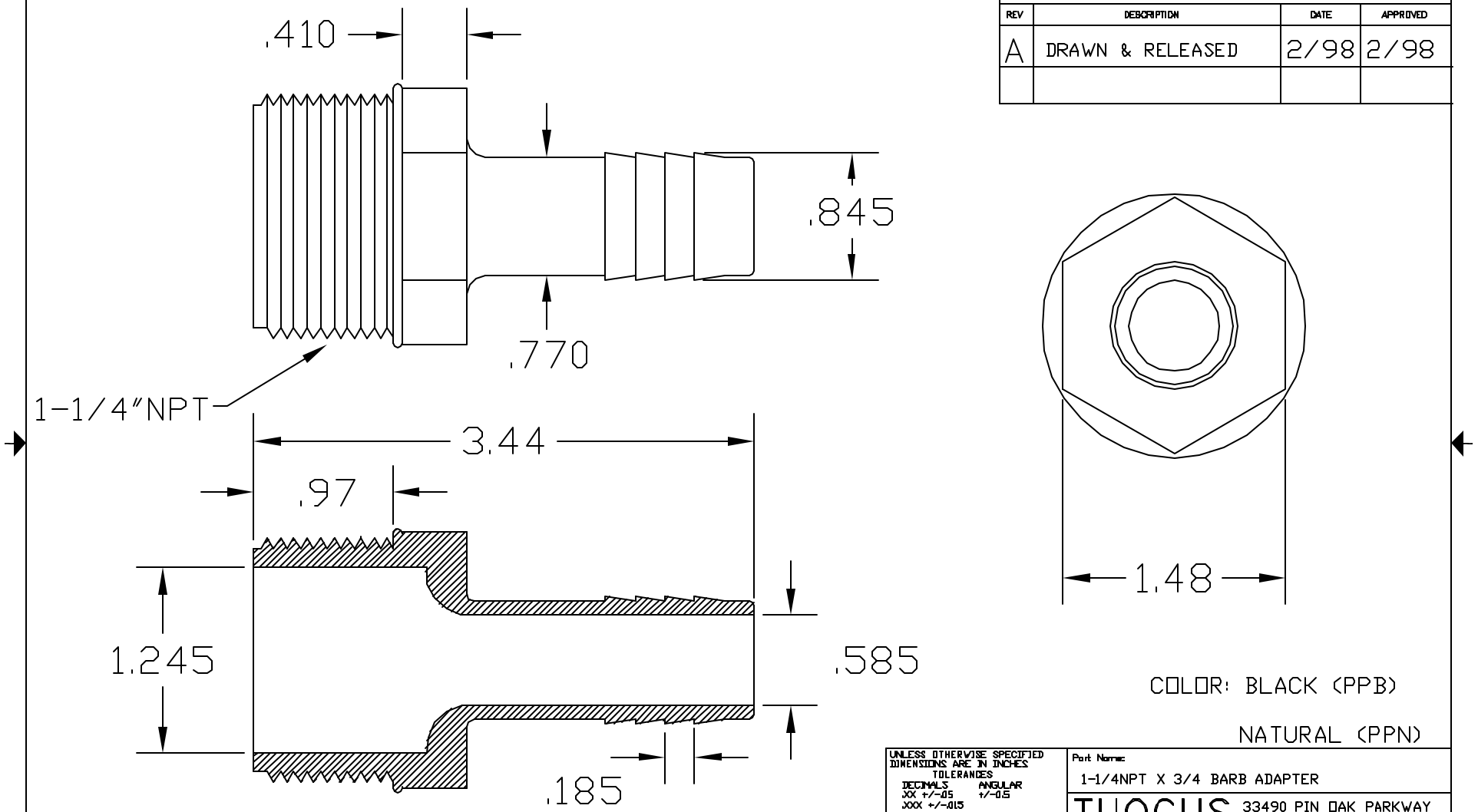

COLOR: BLACK (PPB)

NATURAL (PPN)

CONTROLLED DOCUMENT
ONLY IF IN RED

CONFIDENTIAL

THIS PRINT AND THE SPECIFICATIONS ARE THE PROPERTY OF THOGUS PRODUCTS COMPANY AND HAVE BEEN ISSUED WITH THE UNDERSTANDING THAT IT WILL NOT BE REPRODUCED, REVEALED TO OR USED FOR THE MANUFACTURE FOR OTHERS AND WILL BE RETURNED UPON REQUEST.

UNLESS OTHERWISE SPECIFIED DIMENSIONS ARE IN INCHES
TOLERANCES
DECIMALS: .XX +/-.05, .XXX +/-.015
ANGULAR: +/-0.5

DRAWN: NM

FILENAME: 102012PP

MATERIAL: POLYPROPYLENE

Part Name: 1-1/4NPT X 3/4 BARB ADAPTER

THOGUS PRODUCTS
33490 PIN OAK PARKWAY
AVON LAKE OHIO 44012

Part Number: TA102012/PP

SCALE 1:1

SHEET 1 OF 1