REVISIONS			
REV	DESCRIPTION	DATE	APPROVED
A	REDRAWN & RELEASED	8/97	8/97
B	MODIFY BARBS	01/02	01/02

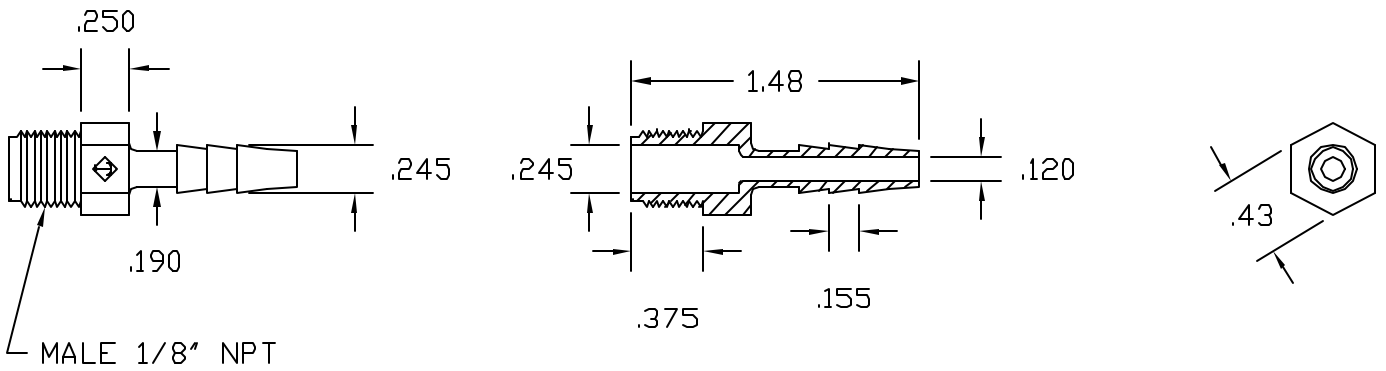

COLOR: BLACK (PPB)

NATURAL (PPN)

CONTROLLED DOCUMENT
ONLY IF IN RED

UNLESS OTHERWISE SPECIFIED DIMENSIONS ARE IN INCHES
TOLERANCES
DECIMALS ANGULAR
.XX +/-.05 +/-0.5
.XXX +/-.015

CONFIDENTIAL
THIS PRINT AND THE SPECIFICATIONS ARE THE PROPERTY OF THOGUS PRODUCTS COMPANY AND HAVE BEEN ISSUED WITH THE UNDERSTANDING THAT IT WILL NOT BE REPRODUCED, REVEALED TO OR USED FOR THE MANUFACTURE FOR OTHERS AND WILL BE RETURNED UPON REQUEST.

DRAWN NM

FILENAME: 1023PP

MATERIAL POLYPROPYLENE

PART NAME: 1/8"NPT X 3/16" ADAPTER

THOGUS PRODUCTS
33490 PIN OAK PARKWAY
AVON LAKE OHIO 44012

PART NUMBER TA1023/PP

REV B

SCALE 1:1

SHEET 1 OF 1