REVISIONS			
REV	DESCRIPTION	DATE	APPROVED
A	REDRAWN & RELEASED	8/97	8/97
B	UPDATE	02/24/00	BM
C	MODIFY BARB	06/02	06/02

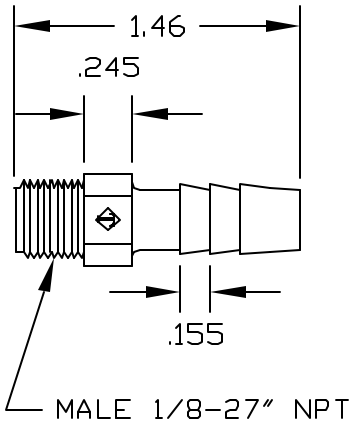

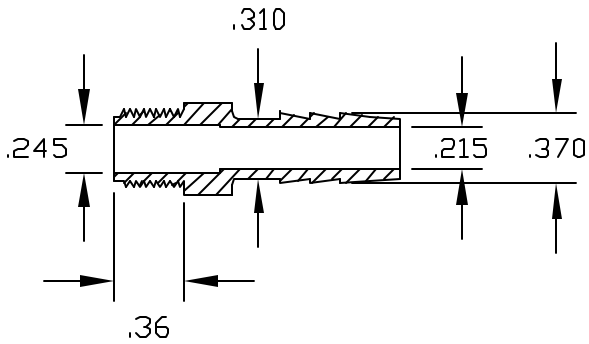

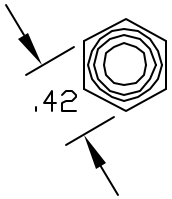

UNLESS OTHERWISE SPECIFIED
DIMENSIONS ARE IN INCHES
TOLERANCES
DECIMALS ANGULAR
.XX +/-.05 +/-0.5
.XXX +/-.015

Part Name
1/8 NPT X 5/16 BARBED ADAPTER

THOGUS PRODUCTS
33490 PIN OAK PARKWAY
AVON LAKE OHIO 44012

DRAWN NM DATE 8/97

FILENAME: 1025P

MATERIAL
POLYETHYLENE

Part Number TA1025/P REV C

SCALE 1:1 SHEET 1 OF 1

CONFIDENTIAL
THIS PRINT AND THE SPECIFICATIONS ARE THE PROPERTY OF THOGUS PRODUCTS COMPANY AND HAVE BEEN ISSUED WITH THE UNDERSTANDING THAT IT WILL NOT BE REPRODUCED, REVEALED TO OR USED FOR THE MANUFACTURE FOR OTHERS AND WILL BE RETURNED UPON REQUEST.