REVISIONS			
REV	DESCRIPTION	DATE	APPROVED
A	REDRAWN & RELEASED	6/98	6/98
B	MODIFIED BARBS	10/01	10/01

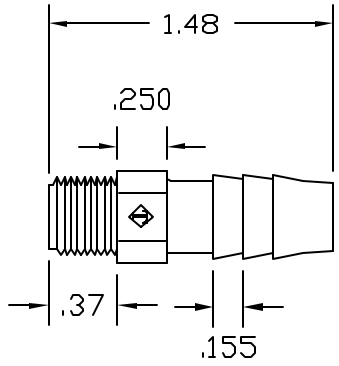

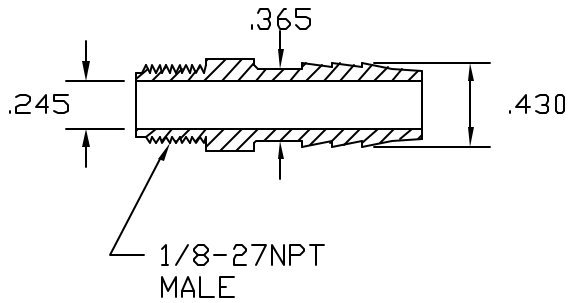

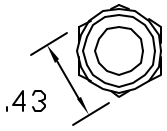

COLOR: BLACK (PPB)

NATURAL (PPN)

CONTROLLED DOCUMENT
ONLY IF IN RED

UNLESS OTHERWISE SPECIFIED
DIMENSIONS ARE IN INCHES
TOLERANCES
DECIMALS ANGULAR
.XX +/-.05 +/-0.5
.XXX +/-.015

CONFIDENTIAL
THIS PRINT AND THE SPECIFICATIONS ARE THE PROPERTY OF THOGUS PRODUCTS COMPANY AND HAVE BEEN ISSUED WITH THE UNDERSTANDING THAT IT WILL NOT BE REPRODUCED, REVEALED TO OR USED FOR THE MANUFACTURE FOR OTHERS AND WILL BE RETURNED UPON REQUEST.

DRAWN NM DATE 6/98

FILENAME: 1026PP

MATERIAL POLYPROPYLENE

Part Name
1/8 NPT X 3/8 BARBED ADAPTER

THOGUS PRODUCTS
33490 PIN OAK PARKWAY
AVON LAKE OHIO 44012

Part Number TA1026/PP REV B

SCALE 1:1 SHEET 1 OF 1