REVISIONS			
REV	DESCRIPTION	DATE	APPROVED
A	REDRAWN AND RELEASED	8/97	8/97
B	MODIFIED BARBS	12/27/99	BM
C	UPDATE DWG	8/07	8/07

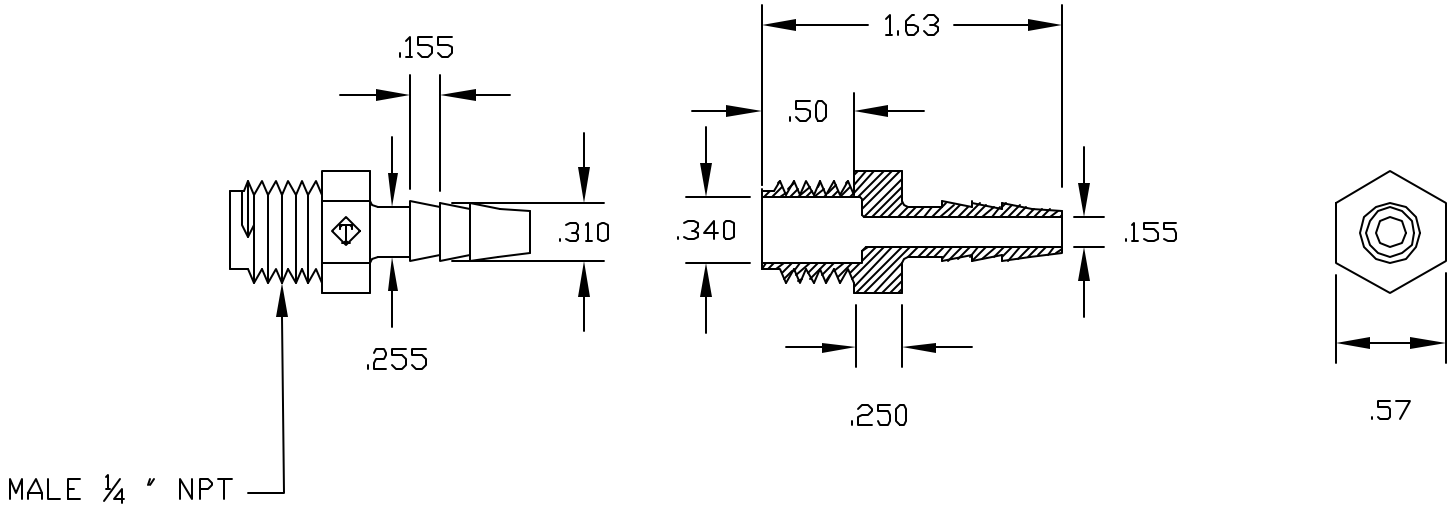

CONTROLLED DOCUMENT
ONLY IF IN RED

UNLESS OTHERWISE SPECIFIED
DIMENSIONS ARE IN INCHES
TOLERANCES
DECIMALS .XX +/-.05 .XXX +/-.015
ANGULAR +/-0.5

CONFIDENTIAL
THIS PRINT AND THE SPECIFICATIONS ARE THE PROPERTY OF THOGUS PRODUCTS COMPANY AND HAVE BEEN ISSUED WITH THE UNDERSTANDING THAT IT WILL NOT BE REPRODUCED, REVEALED TO OR USED FOR THE MANUFACTURE FOR OTHERS AND WILL BE RETURNED UPON REQUEST.

DRAWN BM DATE 12/99
filename: 1044N
MATERIAL NYLON

PART NAME: 1/4 NPT X 1/4 ADAPTER

THOGUS PRODUCTS
33490 PIN OAK PARKWAY
AVON LAKE OHIO 44012

PART NUMBER TA1044/N REV C
SCALE
SHEET 1 OF 1