REVISIONS			
REV	DESCRIPTION	DATE	APPROVED
A	REDRAWN & RELEASED	2/98	2/98
B	UPDATE DWG	9/00	9/00
C	REVISE BARBS LENGTHEN	06/01	06/01
D	.615 WAS .620	06/01	BM

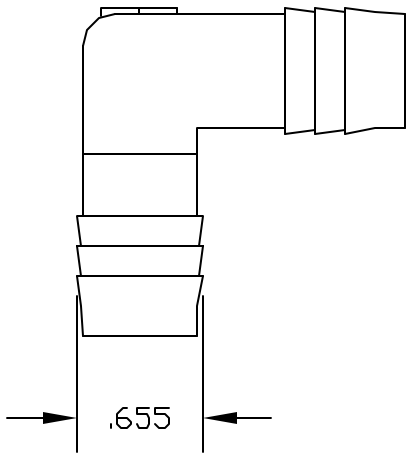

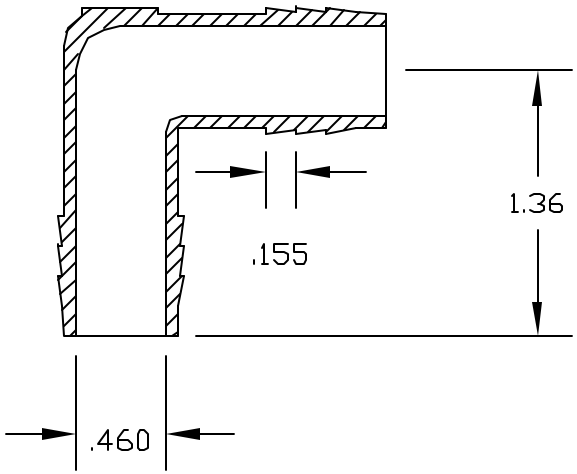

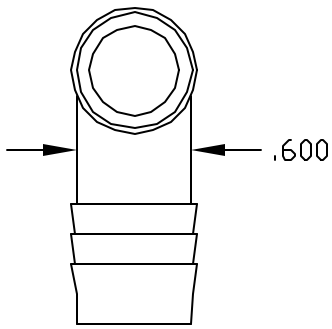

COLOR: BLACK (PPB)

NATURAL (PPN)

CONTROLLED DOCUMENT
ONLY IF IN RED

CONFIDENTIAL
THIS PRINT AND THE SPECIFICATIONS ARE THE PROPERTY OF THOGUS PRODUCTS COMPANY AND HAVE BEEN ISSUED WITH THE UNDERSTANDING THAT IT WILL NOT BE REPRODUCED, REVEALED TO OR USED FOR THE MANUFACTURE FOR OTHERS AND WILL BE RETURNED UPON REQUEST.

UNLESS OTHERWISE SPECIFIED DIMENSIONS ARE IN INCHES
TOLERANCES
DECIMALS .XX +/-.05 .XXX +/-.015
ANGULAR +/-0.5

DRAWN BM

FILENAME: 201010-TPP

MATERIAL POLYPROPYLENE

Part Name: 5/8 BARB X 5/8 BARB ELBOW

THOGUS PRODUCTS
33490 PIN OAK PARKWAY
AVON LAKE OHIO 44012

Part Number TE201010-T/PP

REV D

SCALE 1:1

SHEET 1 OF 1