REVISIONS			
REV	DESCRIPTION	DATE	APPROVED
A	REDRAWN & RELEASED	10/97	10/97
B	MODIFY BARBS	08/02	08/02

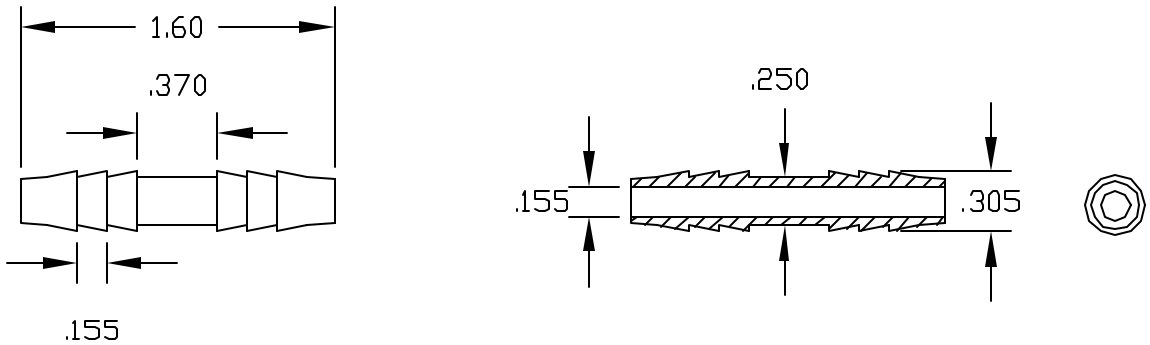

COLOR: BLACK (PPB)

NATURAL (PPN)

CONTROLLED DOCUMENT
ONLY IF IN RED

CONFIDENTIAL

THIS PRINT AND THE SPECIFICATIONS ARE THE PROPERTY OF THOGUS PRODUCTS COMPANY AND HAVE BEEN ISSUED WITH THE UNDERSTANDING THAT IT WILL NOT BE REPRODUCED, REVEALED TO OR USED FOR THE MANUFACTURE FOR OTHERS AND WILL BE RETURNED UPON REQUEST. ©

UNLESS OTHERWISE SPECIFIED DIMENSIONS ARE IN INCHES
TOLERANCES
DECIMALS: XX +/-.05, XXX +/-.015
ANGULAR: +/-0.5

DRAWN	NM	DATE 10/97
CHECKED		10/97
MATERIAL	POLYPROPYLENE	

Part Name: 1/4 BARB X 1/4 BARB CONNECTOR

THOGUS PRODUCTS
33490 PIN OAK PARKWAY
AVON LAKE OHIO 44012

Part Number: TC7044/PP
REV: B

SCALE 1:1
SHEET 1 OF 1