REVISIONS			
REV	DESCRIPTION	DATE	APPROVED
A	REDRAWN & RELEASED	8/99	8/99
B	MODIFY BARBS	08/01	08/01
C	UPDATE DWG	9/07	9/07

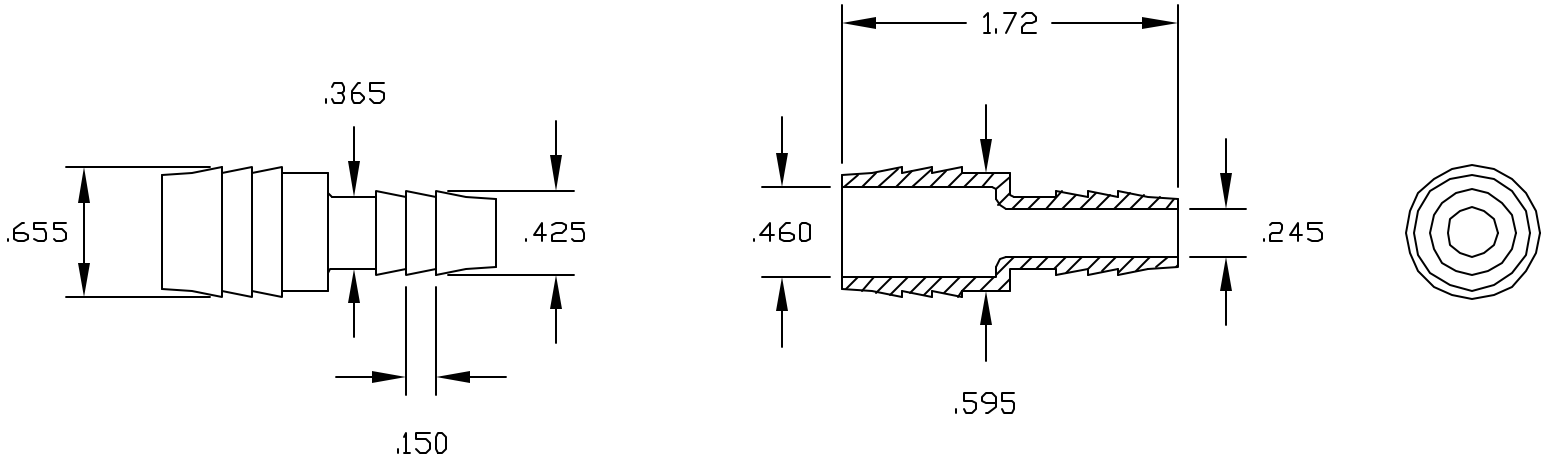

COLOR: BLACK (PPB)

NATURAL (PPN)

CONTROLLED DOCUMENT
ONLY IF IN RED

CONFIDENTIAL
THIS PRINT AND THE SPECIFICATIONS ARE THE PROPERTY OF THOGUS PRODUCTS COMPANY AND HAVE BEEN ISSUED WITH THE UNDERSTANDING THAT IT WILL NOT BE REPRODUCED, REVEALED TO OR USED FOR THE MANUFACTURE FOR OTHERS AND WILL BE RETURNED UPON REQUEST. ©

UNLESS OTHERWISE SPECIFIED DIMENSIONS ARE IN INCHES
TOLERANCES
DECIMALS XX +/-.05 XXX +/-.015
ANGULAR +/-0.5

DRAWN M.S. DATE 2/97

FILENAME: 80106PP

MATERIAL: POLYPROPYLENE

Part Name: 5/8 BARB X 3/8 BARB REDUCER CONNECTOR

THOGUS PRODUCTS
33597 PIN OAK PARKWAY
AVON LAKE OHIO 44012

Part Number: TRC80106/PP

REV C

SHEET 1 OF 1