REVISIONS			
REV	DESCRIPTION	DATE	APPROVED
A	DRAWN AND RELEASE	1/98	
B	UPDATE DWG	9/07	9/07

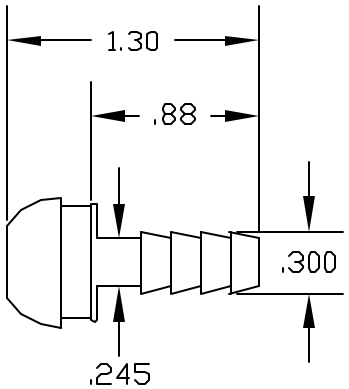

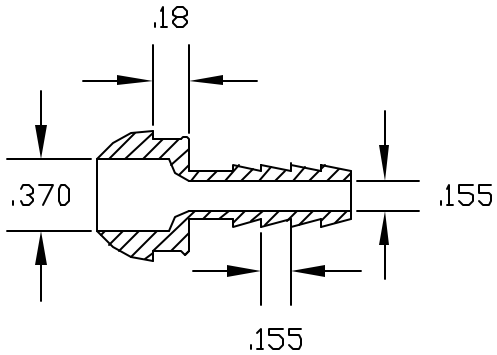

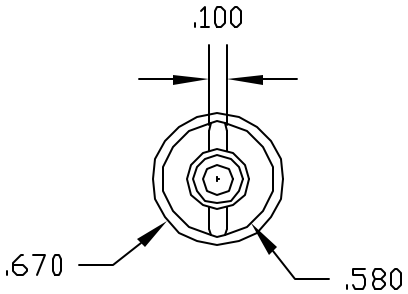

TO MATE WITH THOGUS PART NUMBER
SN8/N, 1/2" NPT FEMALE NUT

CONTROLLED DOCUMENT
ONLY IF IN RED

UNLESS OTHERWISE SPECIFIED
DIMENSIONS ARE IN INCHES
TOLERANCES
DECIMALS ANGULAR
.XX +/-.05 +/-0.5
.XXX +/-.010

DRAWN NM DATE 1/98

FILENAME: SNA8-4N

Material: NYLON

Part Name: 1/4 BARB SWIVEL NUT ADAPTER INSERT

THOGUS PRODUCTS
33490 PIN OAK PARKWAY
AVON LAKE OHIO 44012

Part Number: SNA8-4/N

REV B

SHEET 1 OF 1