REVISIONS				
ZONE	REV	DESCRIPTION	DATE	APPROVED
	B	PART GEOMETRY CHANGED	3/99	3/99
	C	RE-DIMENSIONED	02/00	BM

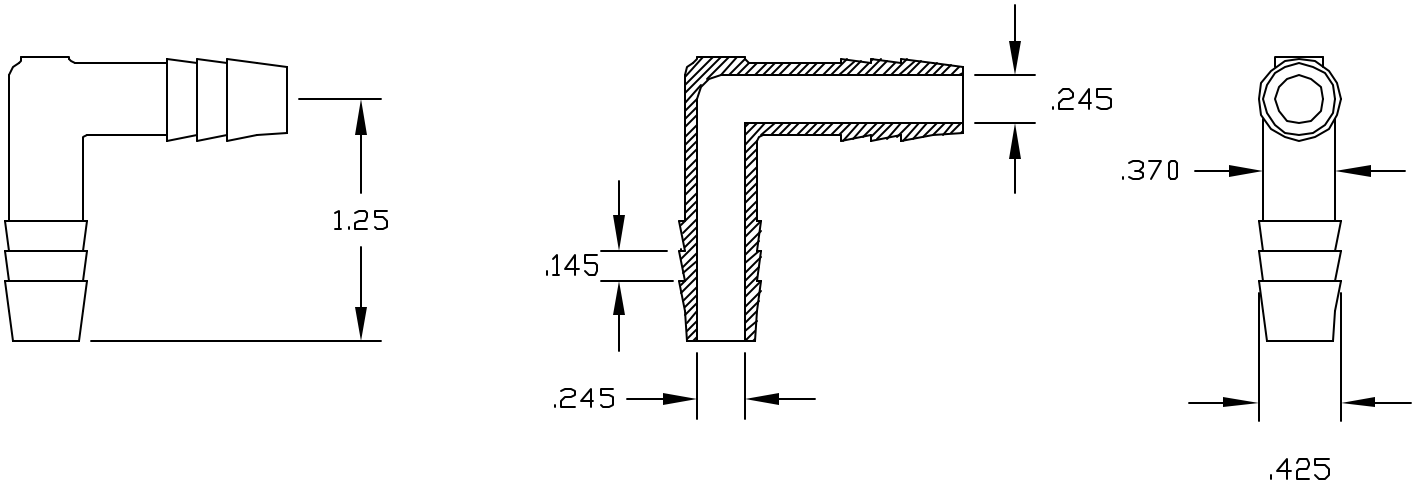

COLOR: BLACK (PPB)

NATURAL (PPN)

CONTROLLED DOCUMENT
ONLY IF IN RED

CONFIDENTIAL
THIS PRINT AND THE SPECIFICATIONS ARE THE PROPERTY OF THOGUS PRODUCTS COMPANY AND HAVE BEEN ISSUED WITH THE UNDERSTANDING THAT IT WILL NOT BE REPRODUCED, REVEALED TO OR USED FOR THE MANUFACTURE FOR OTHERS AND WILL BE RETURNED UPON REQUEST.

UNLESS OTHERWISE SPECIFIED DIMENSIONS ARE IN INCHES
TOLERANCES
DECIMALS XX +/-.05 XXX +/-.015
ANGULAR +/-0.5

DRAWN NM DATE 12/98

FILENAME: 2066-TPP

MATERIAL POLYPROPYLENE

Part Name: 3/8 BARB X 3/8 BARB ELBOW

THOGUS PRODUCTS
334490 PIN OAK PARKWAY
AVON LAKE OHIO 44012

Part Number: TE2066-T/PP

REV C

SHEET 1 OF 1