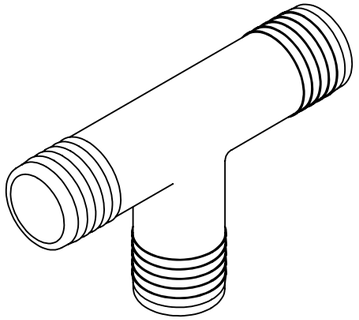

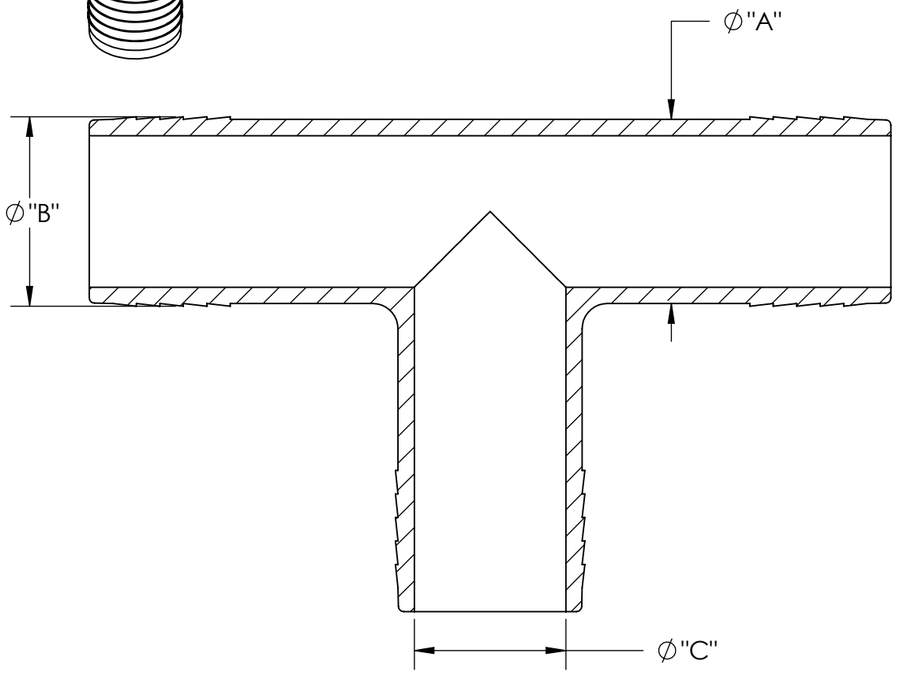

SECTION A-A

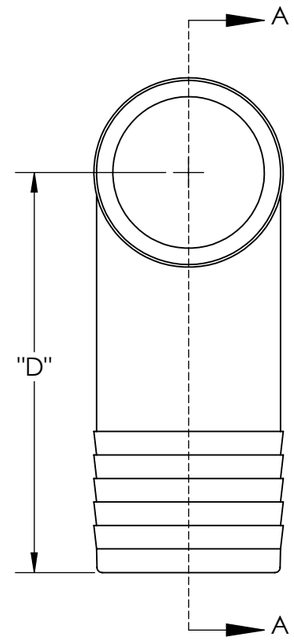

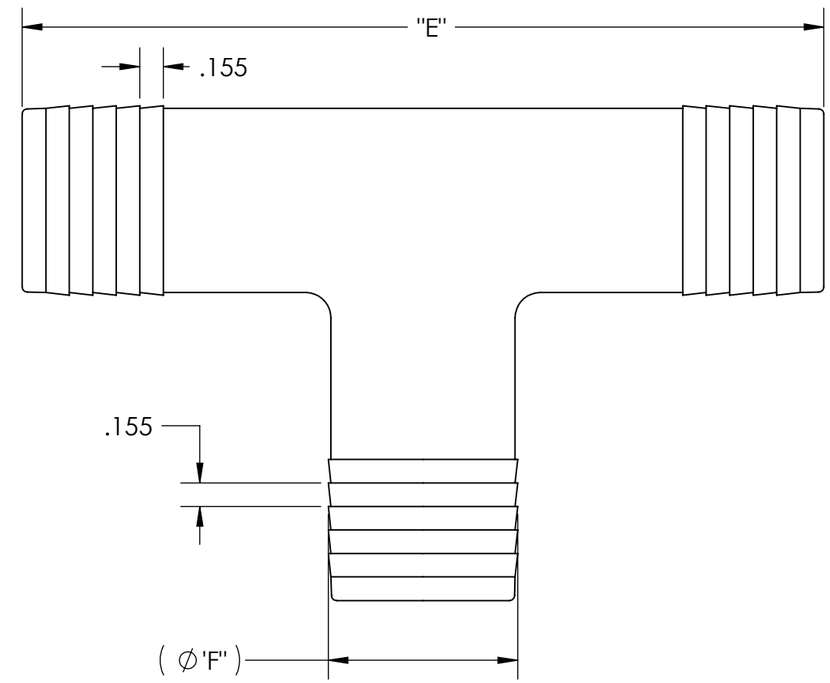

CATALOG NO.	DESCRIPTION	MATERIAL	DIM "A"	DIM "B"	DIM "C"	DIM "D"	DIM "E"	DIM "F"
TT9202020/N	1 1/4 X 1 1/4 X 1 1/4 N	NYLON	1.215	1.250	1.000	2.64	5.29	1.250
TT9202020/PPB	1 1/4 X 1 1/4 X 1 1/4 PPB	POLYPROPYLENE	1.195	1.230	0.980	2.60	5.21	1.232

NOTES:

1) NYLON HAS COLOR OPTIONS:
   BLACK = TT9202020/NB
   NATURAL = TT9202020/NN

PROPRIETARY AND CONFIDENTIAL

THE INFORMATION CONTAINED IN THIS DRAWING IS THE SOLE PROPERTY OF THOGUS PRODUCTS COMPANY. ANY REPRODUCTION IN PART OR AS A WHOLE WITHOUT THE WRITTEN PERMISSION OF THOGUS PRODUCTS COMPANY IS PROHIBITED.

REV	WRO#	DESCRIPTION
D	95.00053	CONVERTED TO 3D FORMAT
E		ADD PPN AND PPB DIMS
F		REMOVE PPN DIMS

HISTORY

UNLESS OTHERWISE SPECIFIED:
DIMENSIONS ARE IN INCHES
TOLERANCES:
ANGULAR: ±0.5°
X.X = ± 0.1
X.XX = ± 0.05
X.XXX = ± 0.015
REMOVE ALL SHARP EDGES AND BURRS
BLEND ALL RADII TO 0.01IN
INTERPRET GEOMETRIC TOLERANCING PER: ANSI Y 14.5 1994
MATERIAL: N
FINISH: NA
THIRD ANGLE PROJECTION:

	NAME	DATE
DRAWN	KDJ	4/06/11
CHECKED	KDJ	4/6/11
ENG APPR.		XX/XX/XX
MFG APPR.		XX/XX/XX
Q.A.		XX/XX/XX

COMMENTS:

DO NOT SCALE DRAWING

Thogus — You think it, we can make it...
33490 PIN OAK, AVON LAKE, OH 44012

TITLE: 1 1/4 BARB X 1 1/4 BARB X 1 1/4 BARB TEE

SIZE: B | DWG. NO. TT9202020 | REV F

SCALE: 1:1 | MASS: | SHEET 1 OF 1