REVISIONS				
ZONE	REV	DESCRIPTION	DATE	APPROVED
	A	REDRAWN & RELEASED	1/98	1/98

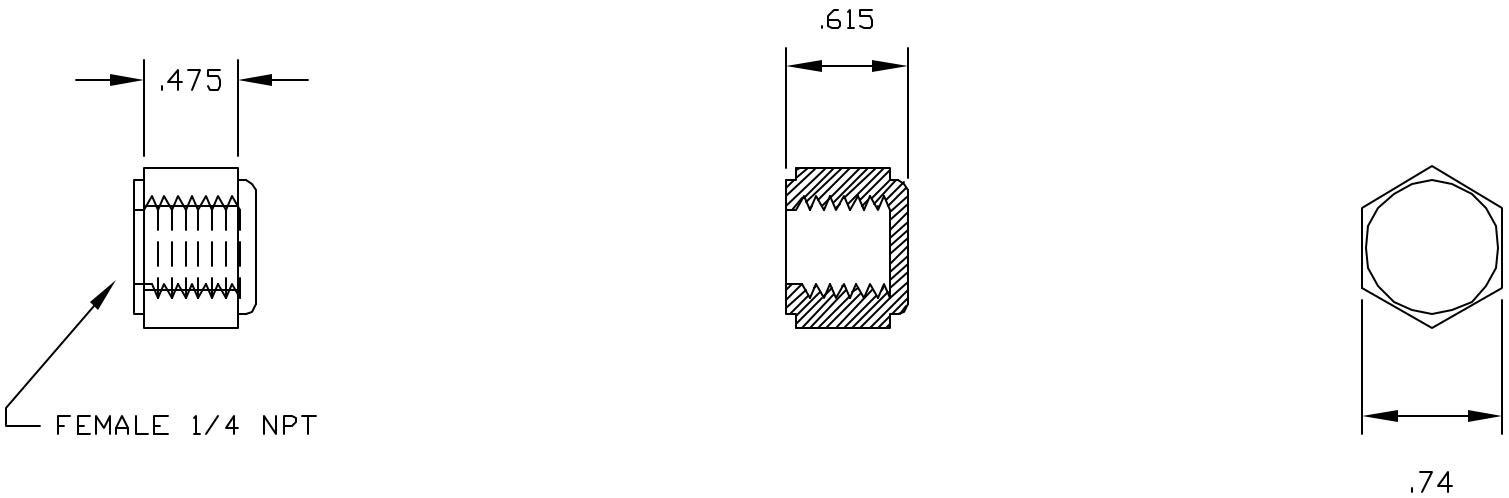

CONTROLLED DOCUMENT
ONLY IF IN RED

CONFIDENTIAL

THIS PRINT AND THE SPECIFICATIONS ARE THE PROPERTY OF THOGUS PRODUCTS COMPANY AND HAVE BEEN ISSUED WITH THE UNDERSTANDING THAT IT WILL NOT BE REPRODUCED, REVEALED TO OR USED FOR THE MANUFACTURE FOR OTHERS AND WILL BE RETURNED UPON REQUEST. ©

UNLESS OTHERWISE SPECIFIED
DIMENSIONS ARE IN INCHES
TOLERANCES
DECIMALS ANGULAR
.XX +/-.05 +/-0.5
.XXX +/-.015

DRAWN NM DATE 1/98

FILENAME: HC4PPB

MATERIAL: POLYPROPYLENE BLACK

Part Name: 1/4NPT FEMALE HEX CAP

THOGUS PRODUCTS
33490 PIN OAK PARKWAY
AVON LAKE OHIO 44012

Part Number: HC4/PPB REV A

SCALE 1:1 SHEET 1 OF 1