UNCONTROLLED IF PRINTED; CONTROLLED DOCUMENT LOCATED IN IQMS DOCUMENT CONTROL

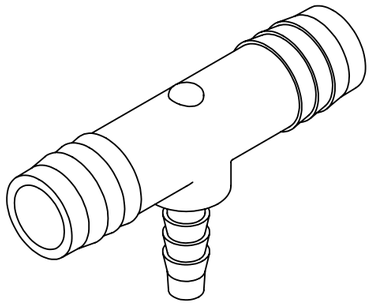

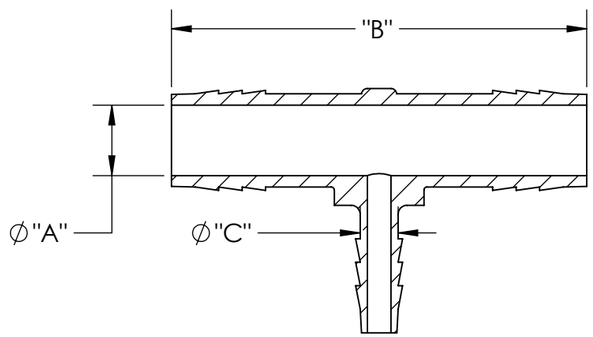

SECTION A-A

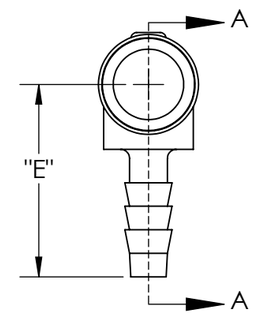

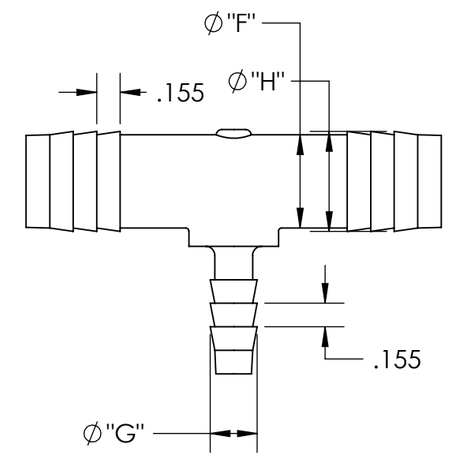

CATALOG NO.	DESCRIPTION	MATERIAL	DIM "A"	DIM "B"	DIM "C"	DIM "D"	DIM "E"	DIM "F"	DIM "G"	DIM "H"
TT941010/N	1/4 X 5/8 X 5/8 N	NYLON	.465	2.74	.250	.155	1.27	.615	.310	.660
TT941010/PP	1/4 X 5/8 X 5/8 PP	POLYPROPYLENE	.450	2.72	.250	.150	1.27	.600	.305	.650
TT951010/P	1/4 X 5/8 X 5/8 P	POLYETHYLENE	.455	2.42	.305	.155	1.14	.590	.305	.640

NOTES;

1) POLYPROPYLENE HAS COLOR OPTIONS:
   BLACK = TT941010/PPB
   NATURAL = TT941010/PPN

REV	WRO#	DESCRIPTION
C	95.00053	CONVERTED TO 3D FORMAT
D		ADDED PPB & N DIMS

HISTORY

PROPRIETARY AND CONFIDENTIAL

THE INFORMATION CONTAINED IN THIS DRAWING IS THE SOLE PROPERTY OF THOGUS PRODUCTS COMPANY. ANY REPRODUCTION IN PART OR AS A WHOLE WITHOUT THE WRITTEN PERMISSION OF THOGUS PRODUCTS COMPANY IS PROHIBITED.

UNLESS OTHERWISE SPECIFIED:
DIMENSIONS ARE IN INCHES
TOLERANCES:
ANGULAR: ±0.5°
X.X = ± 0.1
X.XX = ± 0.05
X.XXX = ± 0.015
REMOVE ALL SHARP EDGES AND BURRS
BLEND ALL RADII TO 0.01IN
INTERPRET GEOMETRIC TOLERANCING PER: ANSI Y 14.5 1994
MATERIAL: N
FINISH: NA
THIRD ANGLE PROJECTION:

	NAME	DATE
DRAWN	CMS	
CHECKED	DM	1/16/14
ENG APPR.		XX/XX/XX
MFG APPR.		XX/XX/XX
Q.A.		XX/XX/XX

COMMENTS:

DO NOT SCALE DRAWING

Thogus You think it, we can make it...
33490 PIN OAK, AVON LAKE, OH 44012

TITLE: 1/4 BARB X 5/8 BARB X 5/8 BARB TEE

SIZE B | DWG. NO. TT941010 | REV D

SCALE: 1:1 | MASS: | SHEET 1 OF 1