REVISIONS			
REV	DESCRIPTION	DATE	APPROVED
A	REDRAWN & RELEASED	4/98	4/98
B	MODIFY BARBS	5/04	5/04
C	UPDATE DWG	9/07	9/07

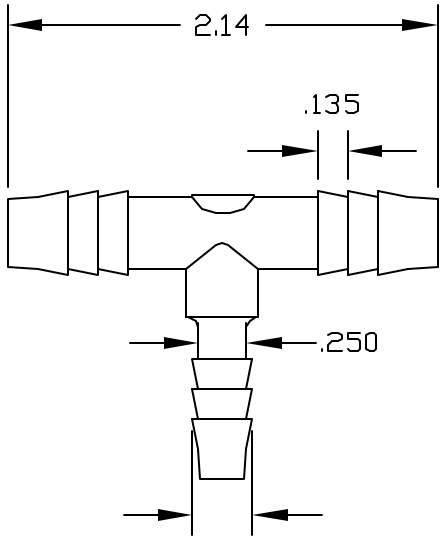

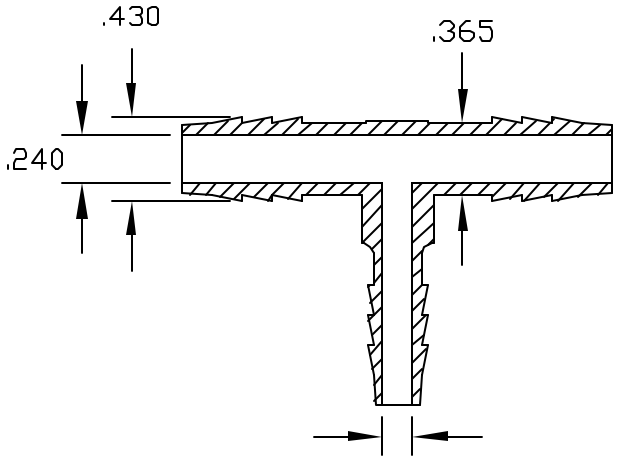

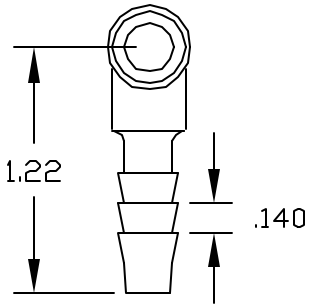

CONTROLLED DOCUMENT
ONLY IF IN RED

CONFIDENTIAL

THIS PRINT AND THE SPECIFICATIONS ARE THE PROPERTY OF THOGUS PRODUCTS COMPANY AND HAVE BEEN ISSUED WITH THE UNDERSTANDING THAT IT WILL NOT BE REPRODUCED, REVEALED TO OR USED FOR THE MANUFACTURE FOR OTHERS AND WILL BE RETURNED UPON REQUEST. ©

UNLESS OTHERWISE SPECIFIED DIMENSIONS ARE IN INCHES
TOLERANCES
DECIMALS XX +/-.05 XXX +/-.015
ANGULAR +/-0.5

DRAWN NM DATE 4/98

FILENAME: 9466P

MATERIAL: POLYETHYLENE

Part Name: 1/4 BARB X 3/8 BARB X 3/8 BARB TEE

THOGUS PRODUCTS
33490 PIN OAK PARKWAY
AVON LAKE OHIO 44012

Part Number: TT9466/P

REV: C

SHEET 1 OF 1