UNCONTROLLED IF PRINTED; CONTROLLED COPY LOCATED IN IQMS DOCUMENT CONTROL

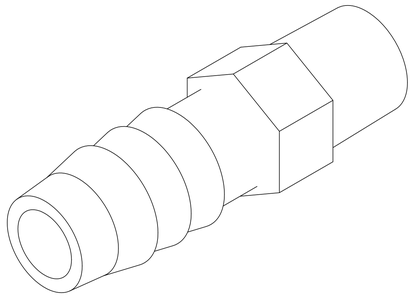

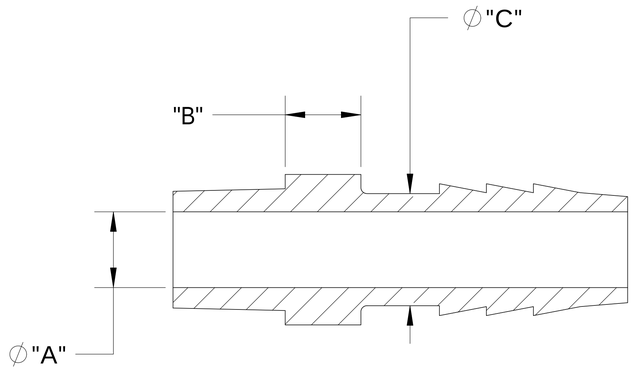

SECTION A-A

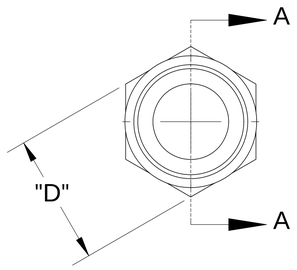

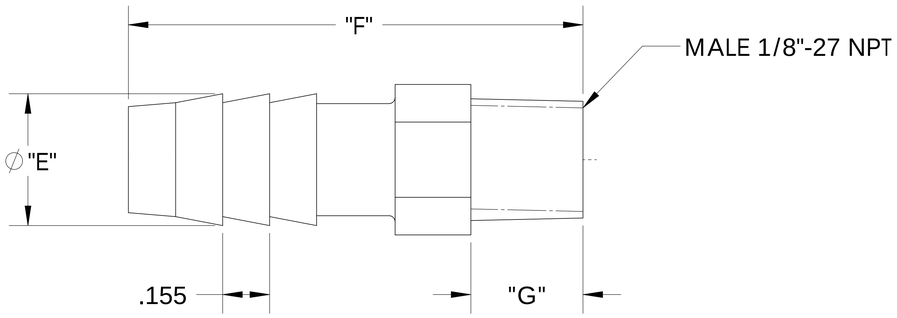

CATALOG NO.	DESCRIPTION	MATERIAL	DIM "A"	DIM "B"	DIM "C"	DIM "D"	DIM "E"	DIM "F"	DIM "G"
TA1026/PP	1/8" NPT X 3/8" PP	POLYPROPYLENE	.245	.250	.365	.43	.430	1.48	.37
TA1026/P	1/8" NPT X 3/8" P	POLYETHYLENE	.245	.245	.370	.42	.430	1.45	.36
SHOWN TA1026/N	1/8" NPT X 3/8" N	NYLON	.250	.250	.370	.43	.435	1.50	.37

NOTES:

1) POLYPROPYLENE HAS COLOR OPTIONS:
   BLACK = TA1026/PPB
   NATURAL = TA1026/PPN

PROPRIETARY AND CONFIDENTIAL

THE INFORMATION CONTAINED IN THIS DRAWING IS THE SOLE PROPERTY OF THOGUS PRODUCTS COMPANY. ANY REPRODUCTION IN PART OR AS A WHOLE WITHOUT THE WRITTEN PERMISSION OF THOGUS PRODUCTS COMPANY IS PROHIBITED.

REV	WRO#	DESCRIPTION
D	95.00072	CONVERTED TO 3D FORMAT

HISTORY

UNLESS OTHERWISE SPECIFIED:
DIMENSIONS ARE IN INCHES
TOLERANCES:
ANGULAR: ±0.5°
X.X = ± 0.1
X.XX = ± 0.05
X.XXX = ± 0.015
REMOVE ALL SHARP EDGES AND BURRS
BLEND ALL RADII TO 0.01IN
INTERPRET GEOMETRIC TOLERANCING PER: ANSI Y 14.5 1994
MATERIAL: PP, P, N
FINISH: NA
THIRD ANGLE PROJECTION:

	NAME	DATE
DRAWN	JRM	03/17/11
CHECKED	KDJ	03/17/11
ENG APPR.		XX/XX/XX
MFG APPR.		XX/XX/XX
Q.A.		XX/XX/XX

COMMENTS:

DO NOT SCALE DRAWING

Thogus You think it, we can make it...
33490 PIN OAK, AVON LAKE, OH 44012

TITLE: 1/8" NPT X 3/8" BARB ADAPTER

SIZE B | DWG. NO. TA1026 | REV D

SCALE: 2:1 | MASS: | SHEET 1 OF 1