REVISIONS			
REV	DESCRIPTION	DATE	APPROVED
A	DRAWN & RELEASED	1/98	1/98
B	UPDATE & ADD RAD.	02/02	02/02
C	UPDATE DWG	9/07	9/07

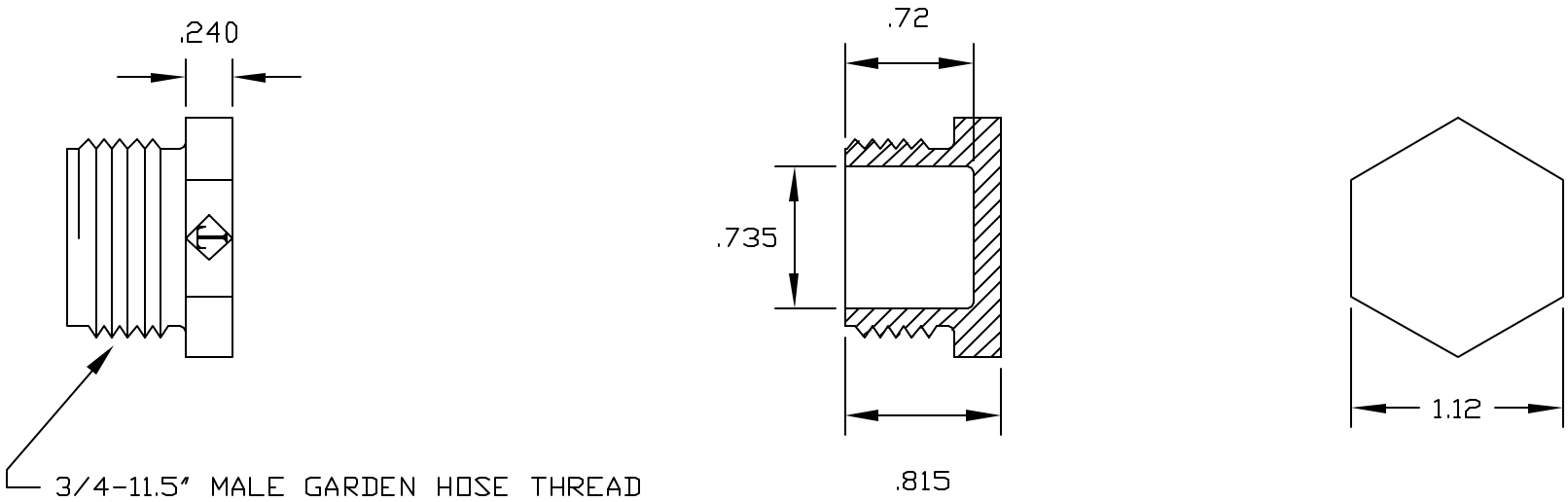

CONTROLLED DOCUMENT
ONLY IF IN RED

CONFIDENTIAL
THIS PRINT AND THE SPECIFICATIONS ARE THE PROPERTY OF THOGUS PRODUCTS COMPANY AND HAVE BEEN ISSUED WITH THE UNDERSTANDING THAT IT WILL NOT BE REPRODUCED, REVEALED TO OR USED FOR THE MANUFACTURE FOR OTHERS AND WILL BE RETURNED UPON REQUEST.

UNLESS OTHERWISE SPECIFIED DIMENSIONS ARE IN INCHES
TOLERANCES
DECIMALS ANGULAR
.XX +/-.05 +/-0.5
.XXX +/-.015

DRAWN NM DATE 1/98

FILENAME: GHP12PPB

MATERIAL: POLYPROPYLENE BLACK

Part Name: GARDEN HOSE THREAD PLUG

THOGUS PRODUCTS
33597 PIN OAK PARKWAY
AVON LAKE OHIO 44012

Part Number: GHP12/PPB

REV C

SHEET 1 OF 1